Cambridge Assessment International Education
Cambridge International General Certificate of Secondary Education

PHYSICS **0625/22**

Paper 2 Multiple Choice (Extended) **October/November 2019**

45 minutes

Additional Materials: Multiple Choice Answer Sheet
Soft clean eraser
Soft pencil (type B or HB recommended)

READ THESE INSTRUCTIONS FIRST

Write in soft pencil.
Do not use staples, paper clips, glue or correction fluid.
Write your name, centre number and candidate number on the Answer Sheet in the spaces provided unless this has been done for you.
DO **NOT** WRITE IN ANY BARCODES.

There are **forty** questions on this paper. Answer **all** questions. For each question there are four possible answers **A**, **B**, **C** and **D**.
Choose the **one** you consider correct and record your choice in **soft pencil** on the separate Answer Sheet.

Read the instructions on the Answer Sheet very carefully.

Each correct answer will score one mark. A mark will not be deducted for a wrong answer.
Any rough working should be done in this booklet.
Electronic calculators may be used.
Take the weight of 1.0 kg to be 10 N (acceleration of free fall = 10 m / s^2).

This syllabus is regulated for use in England, Wales and Northern Ireland as a Cambridge International Level 1/Level 2 Certificate.

This document consists of **14** printed pages and **2** blank pages.

© UCLES 2019

www.root19.com +91 - 9969 353 391

1 A student measures the dimensions of a cylindrical glass beaker.

For which measurement should she use a micrometer screw gauge?

A circumference of the beaker

B diameter of the beaker

C height of the beaker

D thickness of the glass wall of the beaker

2 The graph shows how the speed of a car varies during part of a journey.

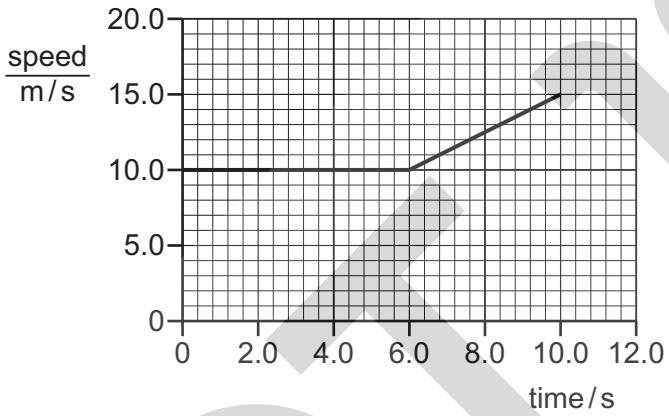

What is the acceleration of the car between 6.0 s and 10.0 s?

A 0.50 m/s^2 **B** 0.80 m/s^2 **C** 1.25 m/s^2 **D** 1.50 m/s^2

3 A car travels at an average speed of 60 km/h for 15 minutes.

How far does the car travel in 15 minutes?

A 4.0 km **B** 15 km **C** 240 km **D** 900 km

4 A box is placed on the ground. An upward force of 15 N is needed to lift the box at constant speed.

Which row correctly describes the box?

	mass of the box	weight of the box
A	1.5 kg	15 N
B	15 N	1.5 kg
C	15 N	150 kg
D	150 kg	15 N

www.root19.com +91 - 9969 353 391

5 The table gives the mass and the volume of three objects P, Q and R.

object	mass / g	volume / cm^3
P	23	36
Q	170	720
R	240	340

Which objects can float in a liquid of density 0.85 g / cm^3?

A P and Q only

B P and R only

C Q and R only

D P, Q and R

6 A hook is used to lift a metal plate, as shown.

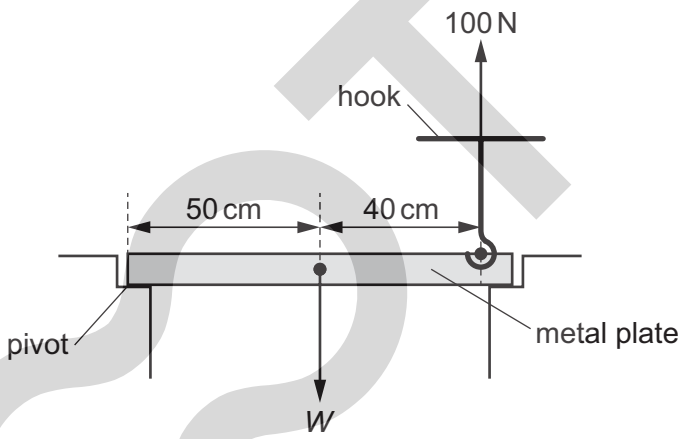

An upward force of 100 N is needed to lift the metal plate about the pivot, as shown.

What is the weight *W* of the metal plate?

A 80 N **B** 100 N **C** 180 N **D** 225 N

7 What is the unit of the moment of a force?

A N **B** N / kg **C** N / m **D** N m

© UCLES 2019 www.root19.com

+91 - 9969 353 591

8 A ship travels due North through still water at a speed of 20 m / s.

It enters a channel where there is a current in the water from West to East. The speed of the current is 20 m / s.

Which diagram shows the resultant velocity *v* of the ship?

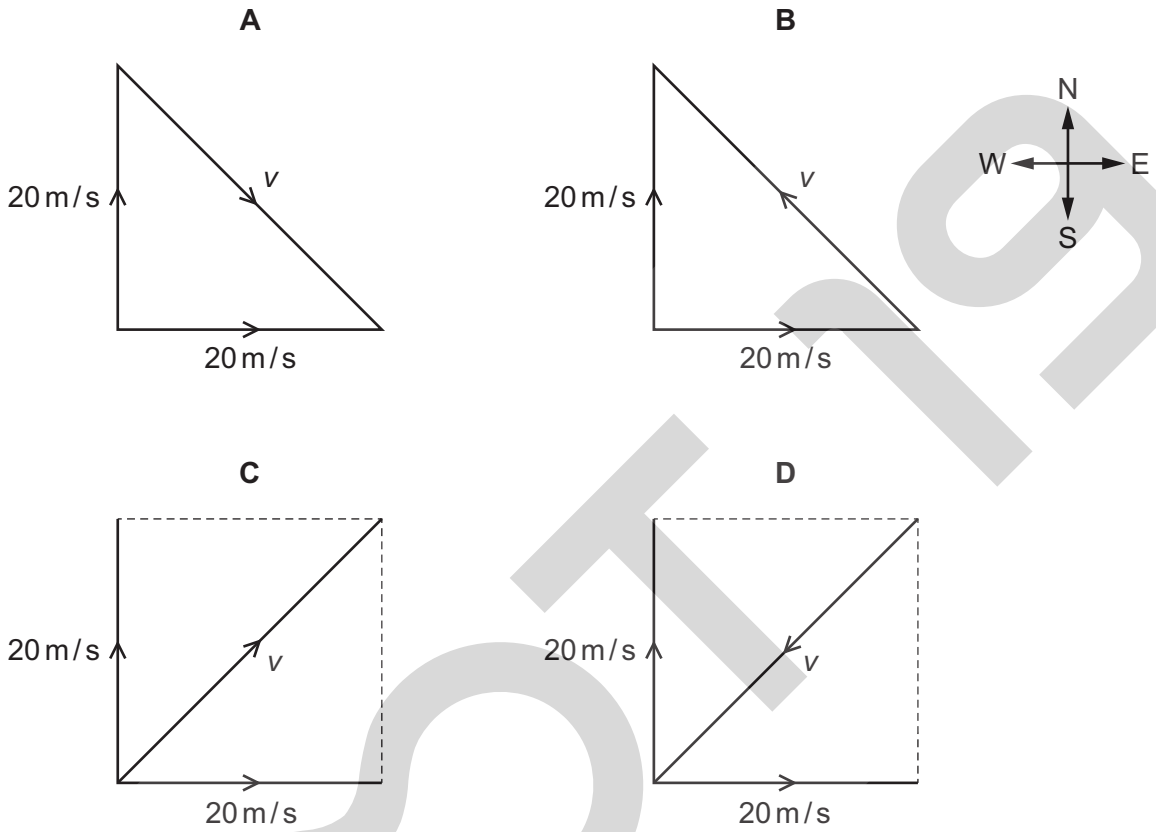

9 A ball is at rest on the ground. A boy kicks the ball. The boy's boot is in contact with the ball for 0.040 s.

The average force on the ball is 200 N. The ball leaves the boy's boot with a speed of 20 m / s.

Which row gives the impulse of the boot on the ball and the average acceleration of the ball?

	impulse on ball N s	average acceleration of ball m / s^2
A	8	0.8
B	8	500
C	5000	0.8
D	5000	500

www.root19.com +91 - 9969 353 391

10 An object P of mass 80 g collides with another object Q of mass 40 g.

After the collision, P and Q stick together and then travel on together.

Before the collision, P is travelling at a speed of 6.0 m / s and Q is at rest.

What is the speed of P and Q after the collision?

A 2.0 m / s **B** 3.0 m / s **C** 4.0 m / s **D** 6.0 m / s

11 Brakes are used to slow down a moving car.

Into which form of energy is most of the kinetic energy converted as the car slows down?

A chemical

B elastic

C thermal

D sound

12 A box of mass 8.0 kg is lifted from the ground and placed on a shelf. The box gains 100 J of potential energy.

The box falls off the shelf. Air resistance can be ignored.

At what speed does the box hit the ground?

A 3.5 m / s **B** 5.0 m / s **C** 25 m / s **D** 28 m / s

13 A car is moving along a straight horizontal road. The car has 1.6 MJ of kinetic energy. The car accelerates for 20 s until the kinetic energy of the car increases to 2.5 MJ.

What is the minimum average power developed by the car engine for this acceleration?

A 45 W **B** 205 W **C** 45 kW **D** 205 kW

© UCLES 2019
www.root19.com

+91 - 9969 353 591

14 A drawing pin (thumb tack) has a sharp point at one end and a flat surface at the other end.

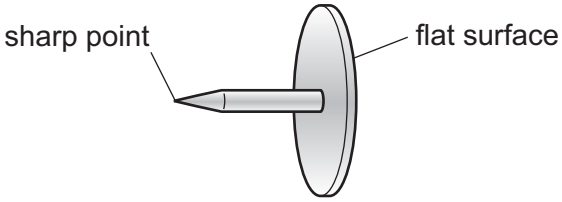

The pin is pushed into a wooden board.

How do the pressure and the force at the sharp point compare with the pressure and the force on the flat surface?

	force at the sharp point	pressure at the sharp point
A	greater than on the flat surface	greater than on the flat surface
B	greater than on the flat surface	less than on the flat surface
C	the same as on the flat surface	greater than on the flat surface
D	the same as on the flat surface	less than on the flat surface

15 The density of mercury is 13 600 kg / m^3.

What is the pressure at the bottom of a column of mercury that has a height of 75.0 cm?

A 1.02×10^4 Pa

B 1.02×10^5 Pa

C 1.02×10^6 Pa

D 1.02×10^7 Pa

16 Which row describes the arrangement and the motion of the molecules in a gas?

	arrangement	motion
A	far apart	move freely
B	far apart	vibrate only
C	tightly packed	move freely
D	tightly packed	vibrate only

17 A bubble of air of volume 3.0 mm^3 is under water. The bubble is at a depth where the pressure of the air inside the bubble is four times atmospheric pressure.

The temperature of the air in the bubble stays the same as it rises to the surface.

What is the volume of the air in the bubble as it reaches the surface?

A 3.0 mm^3 **B** 9.0 mm^3 **C** 12 mm^3 **D** 15 mm^3

© UCLES 2019
www.root19.com

+91 - 9969 353 391

18 The same quantity of thermal energy is supplied to each of four blocks. Each block is made from a different material.

Which block has the greatest thermal capacity?

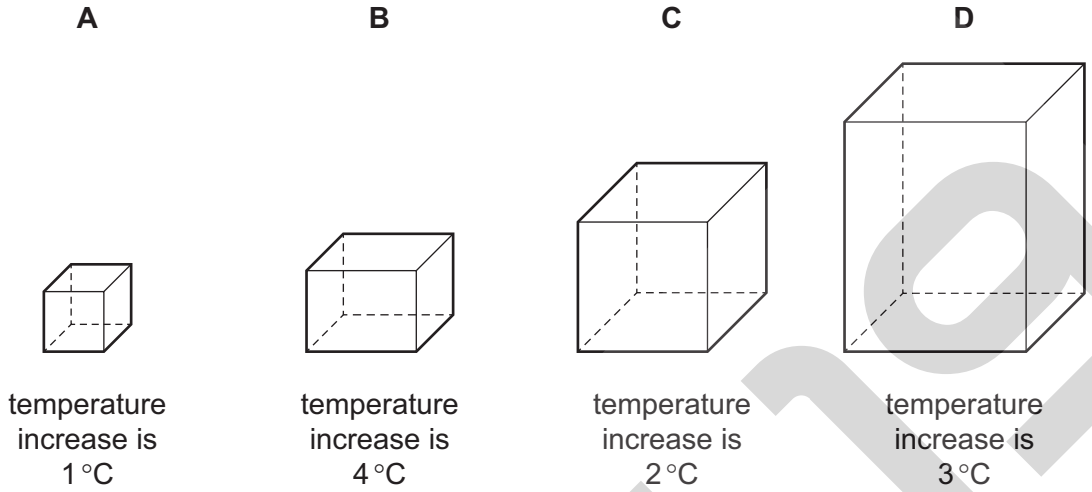

19 A liquid turns into a gas. This occurs only at one particular temperature, and the change happens throughout the liquid.

What is this process called?

A boiling

B condensation

C evaporation

D fusion

20 In a cold country, a bicycle has been left outside all night. The cyclist finds the plastic hand grips feel less cold to the touch than the steel handlebars.

Which row correctly describes the temperature and the property of the two materials?

	the temperature of the two materials	the property of the two materials
A	the temperature of the steel is much lower than that of the plastic	the plastic is a better thermal conductor than the steel
B	the temperature of the steel is much lower than that of the plastic	the steel is a better thermal conductor than the plastic
C	the steel and the plastic are both at the same temperature	the plastic is a better thermal conductor than the steel
D	the steel and the plastic are both at the same temperature	the steel is a better thermal conductor than the plastic

21 The diagram shows a tent made from a new material.

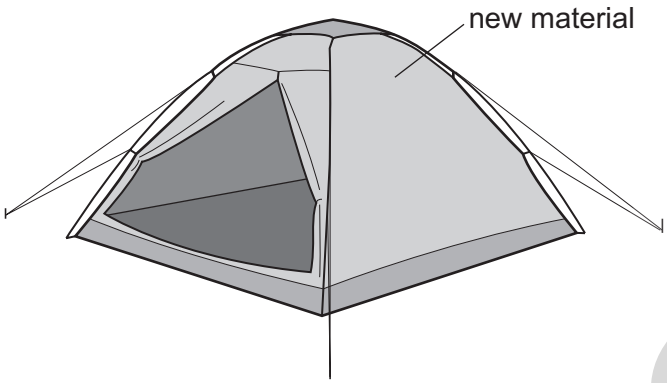

What type of material should the tent be made of to reflect the radiant energy from the Sun?

	material texture	material surface colour
A	dull	black
B	dull	white
C	shiny	black
D	shiny	white

22 A large hill blocks the direct path between a transmitter of radio waves and a receiver, as shown.

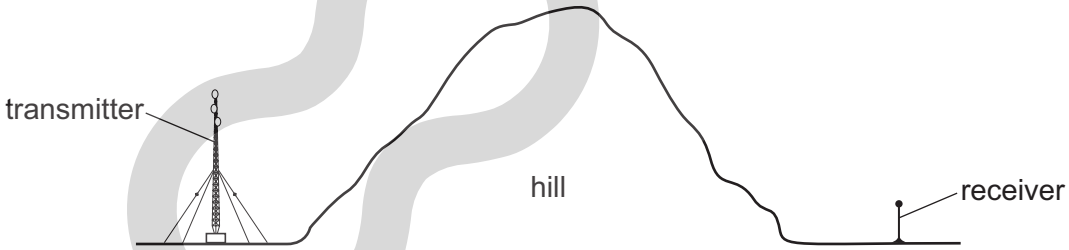

The receiver picks up the signal from the transmitter even though the radio waves do not travel through the hill.

Which row is correct?

	A possible way for this to happen is	A stronger signal is received using
A	diffraction round the hill.	longer wavelengths.
B	diffraction round the hill.	shorter wavelengths.
C	refraction round the hill.	longer wavelengths.
D	refraction round the hill.	shorter wavelengths.

© UCLES 2019
www.root19.com

+91 - 9969 353 391

23 A ray of light is incident on a plane mirror. A student measures the angle of incidence *i* and the angle of reflection *r*.

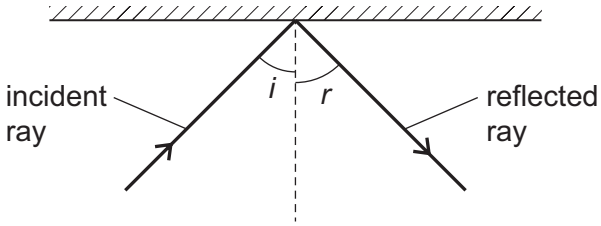

The student varies the angle of incidence and then plots a graph of *r* against *i*.

What does the graph look like?

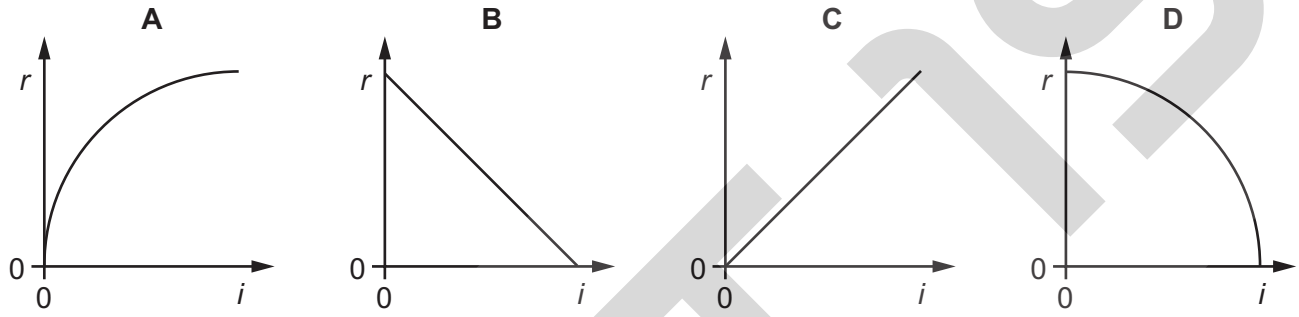

24 What is monochromatic light?

A light of a single amplitude

B light of a single frequency

C light of more than one colour

D light which travels with constant velocity

25 The diagram shows the electromagnetic spectrum.

γ-rays	X-rays	ultraviolet	visible light	infrared	microwaves	radio waves

increasing .....

A word is missing from the label below the spectrum.

Which word is missing?

A amplitude

B frequency

C speed

D wavelength

26 Which row gives a possible set of values for the speed of sound in ice, in water and in steam?

	speed of sound in ice / m/s	speed of sound in water / m/s	speed of sound in steam / m/s
A	500	1500	4000
B	1500	4000	500
C	4000	500	1500
D	4000	1500	500

27 A steel bar is placed in an East-West direction for it to be demagnetised. No other magnet is nearby.

Which method is **not** suitable?

A Hammering the bar.

B Heating the bar to a very high temperature.

C Slowly taking the bar out of a coil that carries an alternating current.

D Slowly taking the bar out of a coil that carries a direct current.

28 A plastic rod is rubbed with a dry cloth. The rod becomes positively charged.

Why has the rod become positively charged?

A It has gained electrons.

B It has gained neutrons.

C It has lost electrons.

D It has lost neutrons.

29 There is a current of 2.0 A in a resistor for 30 s. The potential difference (p.d.) across the resistor is 12 V.

How much energy is transferred in the resistor?

A 1.25 J **B** 5.0 J **C** 180 J **D** 720 J

© UCLES 2019
www.root19.com

+91 - 9969 353 391

30 Identical resistors are connected together to form arrangements X, Y and Z.

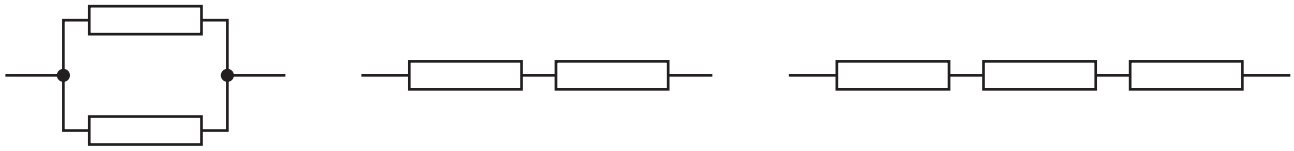

X Y Z

What is the correct order of the resistances of the arrangements from the largest to the smallest?

A X → Y → Z

B Y → X → Z

C Z → X → Y

D Z → Y → X

31 Resistors of 1.0 Ω, 2.0 Ω and 3.0 Ω are connected in parallel with a cell.

Which statement is correct?

A The current in each resistor is different but the potential difference (p.d.) across each resistor is the same.

B The current in each resistor is the same but the potential difference across each resistor is different.

C The potential difference across the 3.0 Ω is greater than the potential difference across the 1.0 Ω resistor.

D The sum of the potential differences across each resistor is equal to the electromotive force (e.m.f.) of the cell.

32 The diagram shows a circuit component.

What is it used for?

A to allow current in one direction only

B to change the direction of the current

C to emit light when there is a current

D to increase the size of the current

© UCLES 2019
www.root19.com

+91 - 9969 353 591

33 Which single logic gate behaves the same as the combination of logic gates shown?

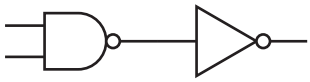

A AND **B** NOR **C** NOT **D** OR

34 Where must a fuse be connected in a mains electric circuit?

A the earth wire only

B the live wire only

C the neutral wire only

D the live wire and the earth wire

35 The N-pole of a magnet is moved into a coil of wire connected to a galvanometer.

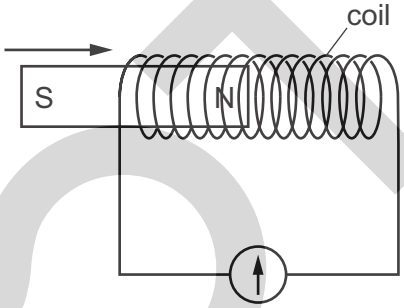

The needle of the galvanometer moves.

Which situation **must** give a smaller galvanometer reading?

A Use a coil with fewer turns and a stronger magnet.

B Use a coil with fewer turns and a weaker magnet.

C Use a coil with more turns and a stronger magnet.

D Use a coil with more turns and a weaker magnet.

36 A step-down transformer is 100% efficient. It has an input voltage of 240 V a.c. and an output voltage of 60 V a.c.

The current in the primary coil is 0.50 A.

What is the current in the secondary coil?

A 0.13 A **B** 0.50 A **C** 2.0 A **D** 8.0 A

© UCLES 2019
www.root19.com

+91 - 9969 353 391

37 The diagrams show the simple atomic structure for two neutral atoms X and Y of different elements.

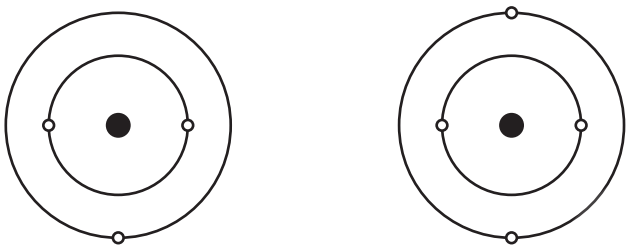

X Y

Which row is correct?

	atom with more electrons	atom with a more positively charged nucleus
A	X	X
B	X	Y
C	Y	X
D	Y	Y

38 Plutonium-238 decays by the emission of an α-particle.

Which equation represents the decay of a plutonium-238 nucleus?

A $^{238}_{94}Pu \rightarrow ^{238}_{95}U + ^{0}_{-1}\alpha$

B $^{238}_{94}Pu \rightarrow ^{234}_{92}U + ^{4}_{2}\alpha$

C $^{238}_{94}Pu \rightarrow ^{234}_{92}U + ^{2}_{4}\alpha$

D $^{238}_{94}Pu \rightarrow ^{242}_{96}U + ^{4}_{2}\alpha$

39 A radioactive isotope has a half-life of 8 days.

A detector close to a sample of this isotope gives a count rate of 200 counts per minute. Without the source, the background count is 20 counts per minute.

What is the count rate due to the source after 8 days?

A 80 counts per minute

B 90 counts per minute

C 100 counts per minute

D 110 counts per minute

www.root19.com +91 - 9969 353 591

40 Why are some radioactive sources stored in boxes made from lead?

A Lead absorbs emissions from the radioactive sources.

B Lead decreases the half-life of radioactive sources.

C Lead increases the half-life of radioactive sources.

D Lead repels emissions from the radioactive sources.

© UCLES 2019
www.root19.com

+91 - 9969 353 391

BLANK PAGE

© UCLES 2019
www.root19.com

+91 - 9969 353 391

BLANK PAGE

Permission to reproduce items where third-party owned material protected by copyright is included has been sought and cleared where possible. Every reasonable effort has been made by the publisher (UCLES) to trace copyright holders, but if any items requiring clearance have unwittingly been included, the publisher will be pleased to make amends at the earliest possible opportunity.

To avoid the issue of disclosure of answer-related information to candidates, all copyright acknowledgements are reproduced online in the Cambridge Assessment International Education Copyright Acknowledgements Booklet. This is produced for each series of examinations and is freely available to download at www.cambridgeinternational.org after the live examination series.

Cambridge Assessment International Education is part of the Cambridge Assessment Group. Cambridge Assessment is the brand name of the University of Cambridge Local Examinations Syndicate (UCLES), which itself is a department of the University of Cambridge.

www.root19.com +91 - 9969 353 391